99512-81A50-015.book Page 54 Tuesday, June 12, 2007 9:44 AM
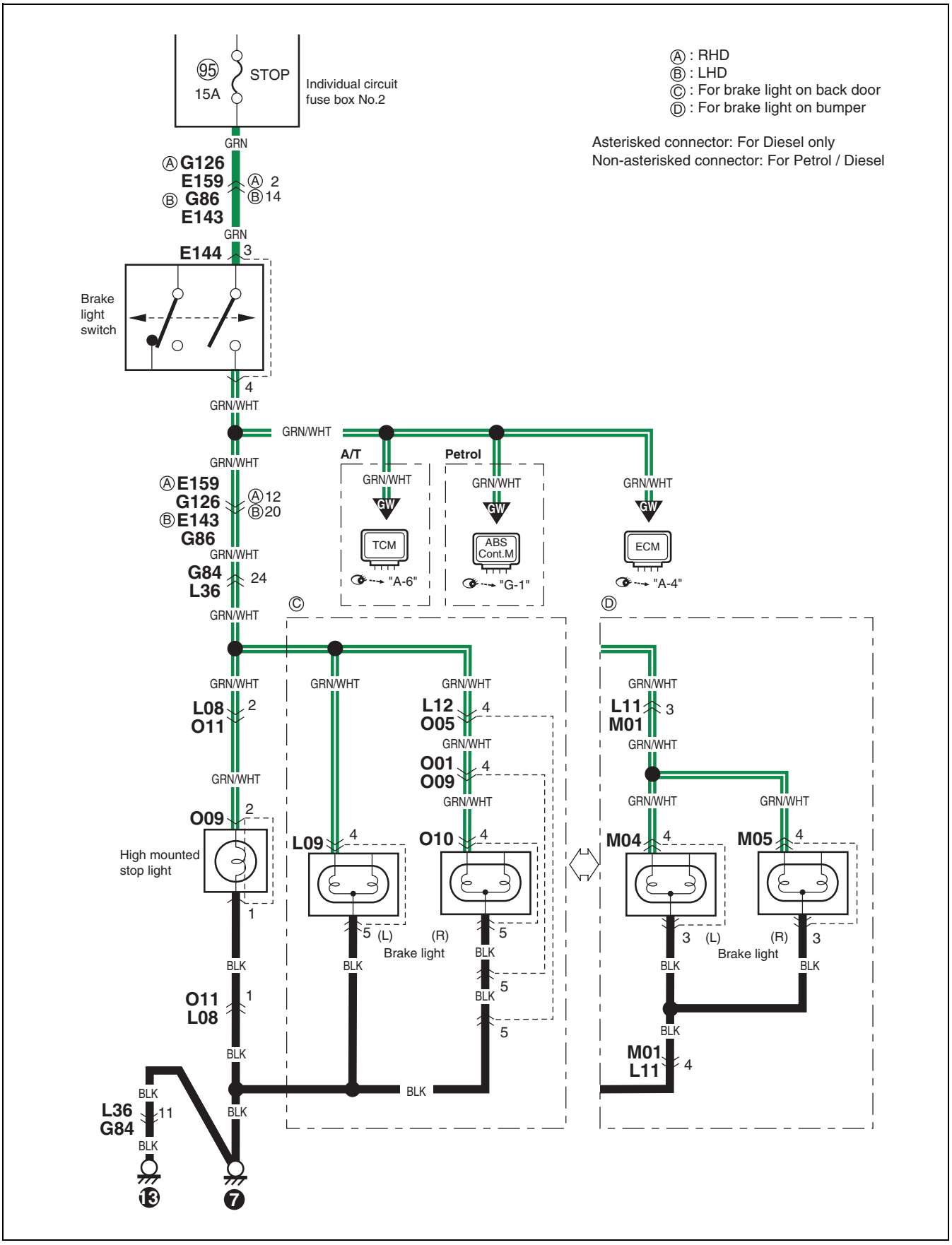
D-6: Brake light
D-6: Bremsleuchte
D-6: Feux stop
D-6: Luz del freno